Anti-slip tape 25 mm



TECHNICAL SPECIFICATIONS

Overall width (B)	25 mm
Length	18300 mm
Material	Aluminium

DIMENSIONS

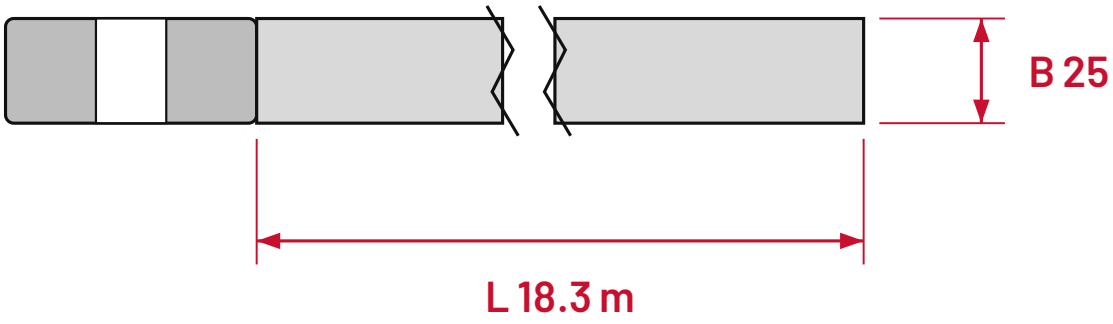

mm

B Overall width **L** Length
All dimensions in mm

AVAILABLE VERSIONS

Item no. · Weight

Colour / Size	25mm x 18.3m (roll)
Black	H3406N-25mm
Orange	H3406O-25mm
White	H3406W-25mm
Yellow	H3406Y-25mm
Black/Yellow	H3406YB-25mm